Kids Stool - 14"

Chairs & Hard Seating Collection

SKU 2075010-14

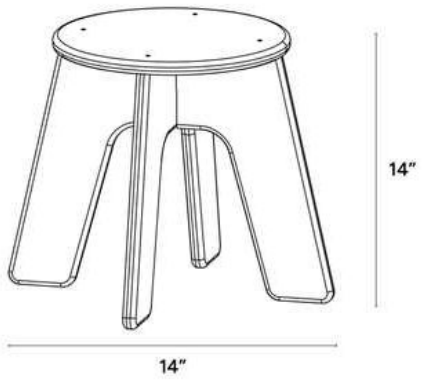

DIMENSIONS

Overall Length	--
Overall Depth	--
Overall Height	--
Includes	--

CAPACITY

Product Weight	--
Load Capacity	--

SHIPPING

Lead Time	4-6 Weeks
Ship Method	--
Cartons	--
Ship Weight	--
HS Code	--

MATERIALS

Substrate	Baltic Birch Plywood
Finish	Clear, low-VOC
Edges	Eased, hand-sanded
Origin	Canada

SPECIFICATIONS

Recommended Age	2-10 years
Warranty	Limited Lifetime

Specifications subject to change without notice.
© 2026 Fern Kids · Sheet 1 of 1